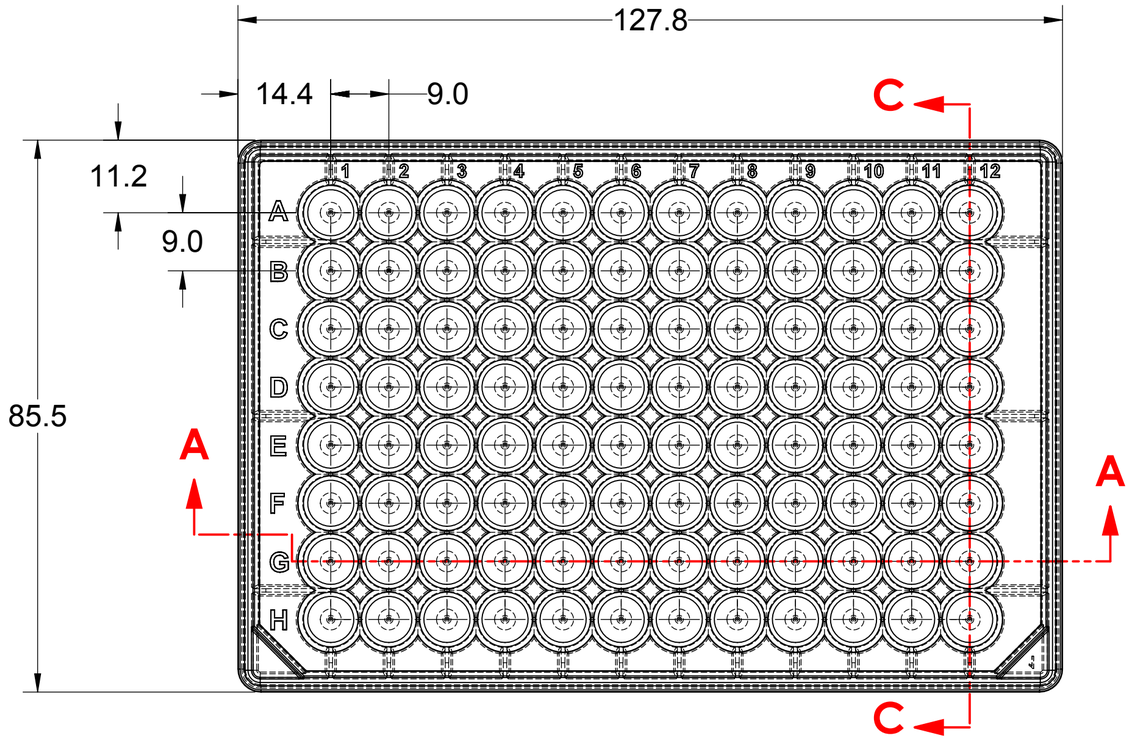

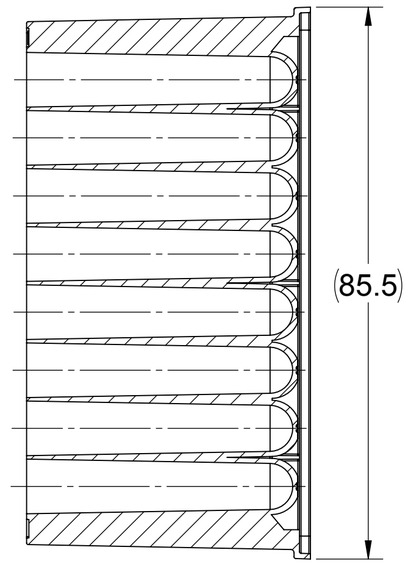

SECTION C-C

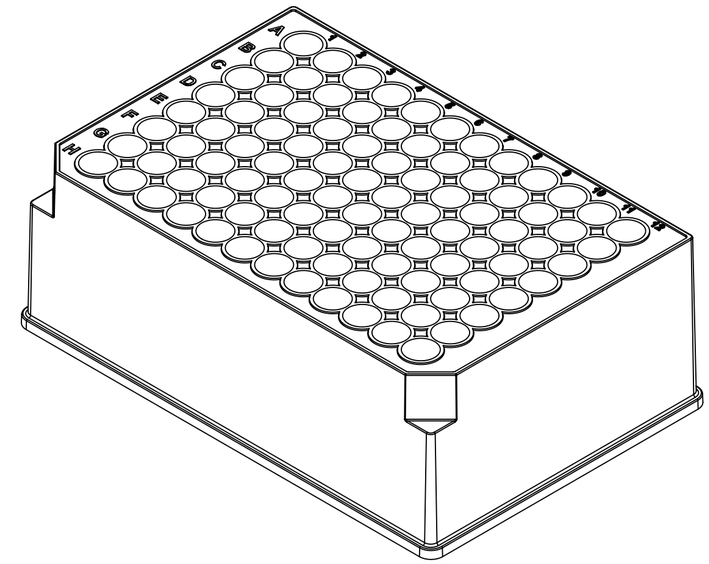

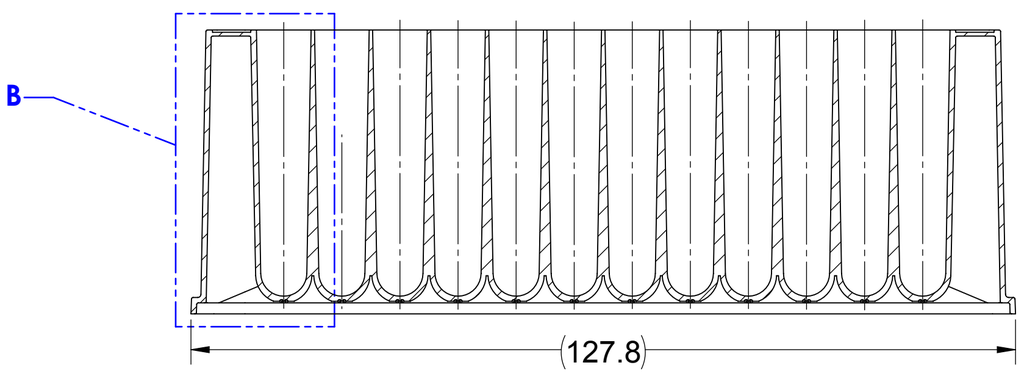

SECTION A-A

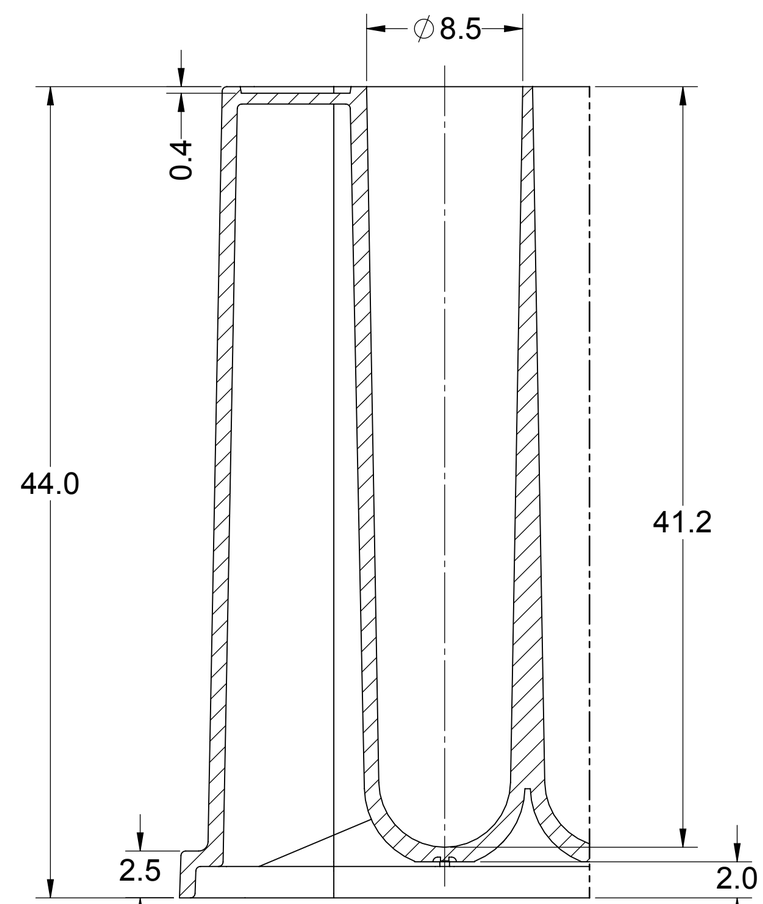

DETAIL B

TITLE: *96 WELL ROUND STD HEIGHT HTS RACK*		
ITEM: *7651-XX*	REV.: *REL*	DATE: *10/13/2017*